PAULY

Fotoelektrik Pauly GmbH & Co. KG, Wahrbrink 6, D-59368 Werne, Telefon 02389/40227-70, Telefax 02389/40227-77, www.pauly-lichtschranken.de

Control Unit Type PV21112/2 with Pollution Warning

for 1 Light Barrier with Driver Stage (v) not(!) Preamplifier (vv)

Valence of Position / digit position in Typification	0	1	2	3	4
1 Type of Device			Control unit for ext. LB		
2 Number of Light-barriers and Type of Housing	1 R26	1 R27	2 R27	3 R57	4 R57
3 Mode of Operation	async minimal 2 LB	sync from 1 LB	mpx minimal 2 LB		
4 Performance	standard	high			
5 El. Design of Optics & max length of shielded cables	without preamp 2 x 4m	like 5.0 special output	with driver stage 2x 40m		

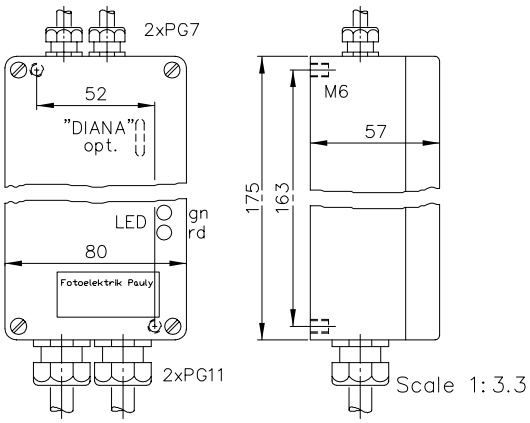

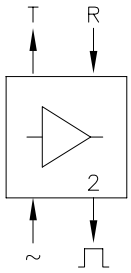

High Gain Optical Head Control Unit with Pollution Warning

PV21112/2

Order no.:

2124

Supply and output connection:

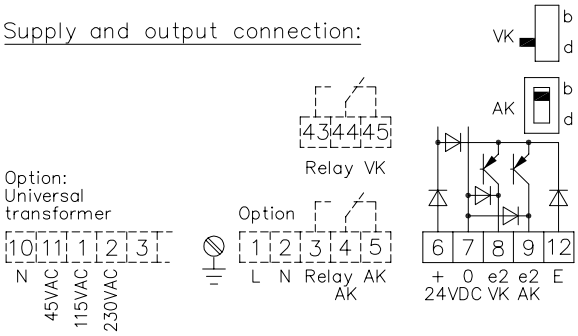

Connection of optical units:

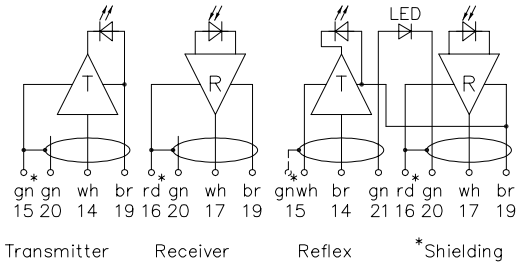

Technical Characteristics:

Housing	Al-Cast
Weight	approx. 850g
Protection mode	IP65
Supply	24VDC/80mA without load
Output	2xpnp 60mA s.c.-prot., e2
Switching mode	bright-/darkswitching selectable
Steady light resistance	>80kLx
Interference suppression	forced synchronization
Access time	<12ms/switch transition
Switching rate	electron.: 40/s relay: 10/s;
Switch indicator "AK"	LED, green (brightswitching)
Switch indicator "VK"	LED, red (darkswitching)
Power reserve	>50000:1/0m betw. T & R
Ambient temperatur	-25...+60°C

Options:

Connection	4+1 pin Plug stA5
	6+1 pin Plug stA7
	5+1 lead no.-cable K6
	3x3 lead no.-cable 3K3
Connection Transm.	3 pin Plug stB3
Receiver	4 pin Plug stB4
Supply	24...80VDC
	230VAC, 110...130V, 42...48V, 24VAC
	230/115/45VAC with universal transformer
Output	2xRelay 250VAC/10A, 2500VA, 1xCh., R
	2xnpn 60mA s.c.-prot., e3
	2xOptocoupler 60V/50mA, e1
Access time	"q": <2ms/switch transition
Switching rate	"q": 300/s, Relay: 10/s
Time delay	0...10s, switching-on-off-delay, separately adjustable, z10 (only AK)
Level indicator	DIANA, i
	DIANA-Distributing for optics, i-i
	Driver for external DIANA, i-i3x or i-i5x
Test function	switching off by means of a potential-free contact

Accessories:

Optics A...Z only with additional "v"

Recommended field of application:

In connection with one pair of optics where space is very tight or temperature is expected to be high.

Attention: Allowed cable length for optic Heads max. 40m. Do not lay transmitter cable parallel to receiver cable. Close staggering of several light beams only allowed with multiplex systems. Do not use relay contacts for PLC-inputs. The switching equipment for the pollution warning (VK, red LED, switch pos. "d") is switched through when dirt or clogging causes the signal level to be under five times the minimum level. In case of using a Reflex optic head, please read the "Connection Regulations for Reflex Optic Head". *E_ 2124 1.TXT*

2124 DE
E_ 2124 1
(02.05.97 tb)
(17.07.02 tb)
(12.06.03 gs)
10.12.04 mj/tb

The design and make of the devices and their electronics are intellectual property of the company "Fotoelektrik Pauly GmbH & Co. KG". Internal circuit diagrams can, for copyright reasons, not be given therefore. Subject to technical alterations. Errors excepted. The reprinting of this data sheet or the copying of extracts from it are allowed only with the approval of the "Fotoelektrik Pauly GmbH & Co. KG" and with an indication of the sources used. Infringements are punishable by law.